Directly actuated seat valves

2/2- and 3/2-way

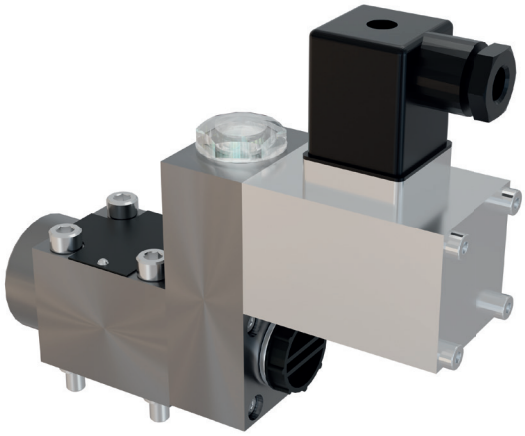

Features

- Directly actuated directional seat valve controlling pressurised media.
- The valve seat seals hermetically preventing internal leaks.
- All parts are made of corrosion-resistant materials, and they are easily replaceable.
- Valve design in a structural plate form
- On request, the valve can be equipped with other actuations than the electromagnet, e.g. hydraulic or pneumatic cylinder actuation, manual pushbutton operation
- In addition, the individual actuations can be supplemented with a maintained-contact function

Function of 2/2-way valve

The force (1), generated by the actuation, acts through the lever (2), the tappet (3) on the ball (4) and presses it out of the valve seat (5). This is used to connect lines P and A, see Example. The ring (6) supports the flange seal from the inside. The volume flow is limited by the entire flow resistance.

Depending on the arrangement of the valve seat (5) and ball (4) the valve will have the basic position normally closed (NC) or normally open (NO).

Example 2/2-way valve

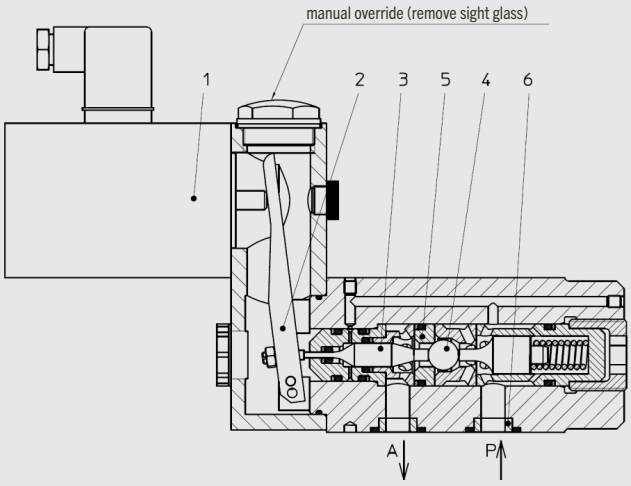

Symbol

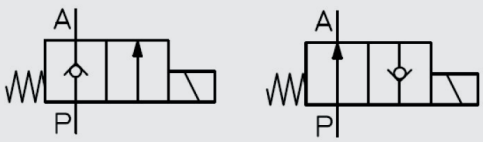

Function of 3/2-way valve

The force (1), generated by the actuation, acts through the lever (2), the tappet (3) on the ball(s) (4) and presses it out of the right valve seat (5) and into the left valve seat (5). This is used to connect lines P and A and shut off line T, see Example. The ring (6) supports the flange seal from the inside. The volume flow is limited by the entire flow resistance.

The 3/2-way valve is provided with a „negative overlap“. During the changeover process, connections P, A and T are briefly connected with each other. The changeover occurs so fast that the hydraulic effects are negligible. By design, a 3/2-way valve always requires the connection of a T-connector; only then a proper switching function can be ensured.

Depending on the design of the valve insert a valve with the basic position „A→T NO“ (lines A and T are connected) or „P→A NO“ (lines P and A are connected) is provided.

Example 3/2-way valve

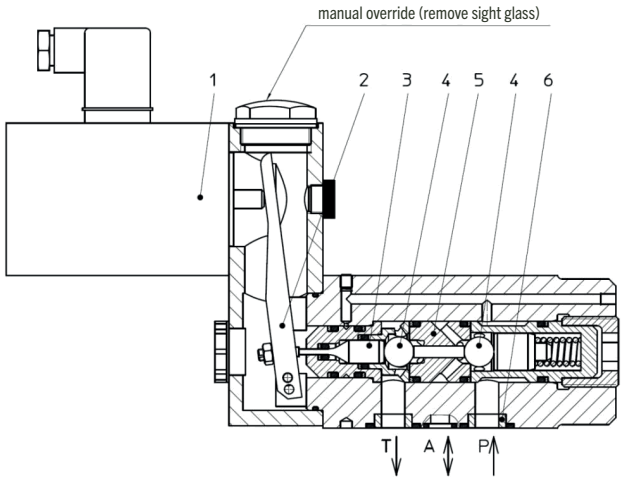

Symbol

Directly actuated seat valves DN10 | PN700 | 40l/min

2/2- and 3/2-ways

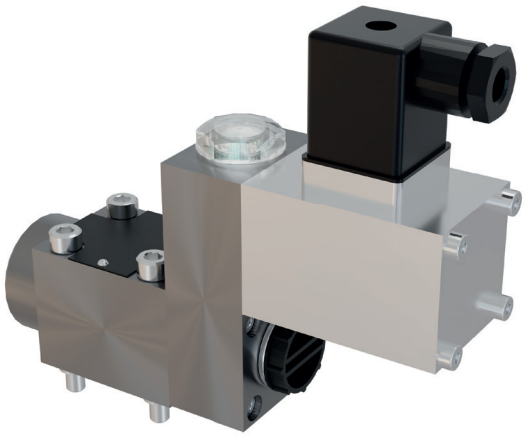

Technical data

measured with HFA medium 97/3%, at 20°C

General	
Weight	8,1 kg
Installation position	any
Ambient temperature	-10 to 50°C (hydraulic fluids, heed standard requirements)
Material Valve parts Material Seals	Stainless steel, bronze except electromagnet FKM, PTFE

Hydraulic	
max. operating pressure of connector P	700bar
max. operating pressure of connector A	700bar
max. operating pressure of connector T	50bar
max./min. control pressure of connector Z	see Order information
max. volume flow P→A	40 l/min
max. volume flow A→T	40 l/min
specified direction of flow	P→A, A→T
Pressure fluid - Medium - Temperature range - Medium - Quality - Cleanliness class, filter fineness - Viscosity	water, HFA 5 to 50°C see Hauhinco requirements on water and HFA media class 20/18/15, filter fineness 25µm 0,6 bis 100 mm^2/s
Pressure fluid - Medium - Temperature range - Medium - Quality - Cleanliness class, filter fineness - Viscosity	mineral oil, HLP -10 to 50°C acc. to DIN 51524 Class 20/18/15, filter fineness 25µm 0,6 bis 100 mm^2/s
Use of other pressure fluids on request.	
The covers (6) are designed with a viscosity of approx. 1.0 mm^2/s; if a medium with a substantially different viscosity is used, the covers must be selected such that the maximum admissible volume flow is not exceeded.	

Electric	
Voltage	24 VDC, 110 VAC (96 VDC), 230 VAC (205 VDC)
AC grid, admissible tolerance	± 10%
AC grid, admissible frequency	50 to 60 Hz
Power consumption	55 W
Operating time	100% ED
Degree of protection acc. to EN60529	IP65
max. switching rate	1 Hz

Order information

Included in the scope of supply	
Mounting screws of the valve	Cheese-head screw M10
Cable socket of the valve solenoid - Supply voltage 24 VDC - Supply voltage 110 VAC - Supply voltage 230 VAC	according to DIN 43650 – type of design A max. 100 VA, LED-display + Z-diode, IP65 max. 1.5 A, bridge rectifier, LED display, IP65 max. 1.5 A, bridge rectifier, LED display, IP65

2/2-way valve DN10 | PN700 | 40l/min, solenoid actuation

Designation	Basic position	Voltage	Article number
2/2-way valve DN10 PN700	NC	24 VDC	6553486
	NC	110 VAC	6547281
	NC	230 VAC	6547303
2/2-way valve DN10 PN700	NO	24 VDC	6553494
	NO	110 VAC	6547311
	NO	230 VAC	6547338

3/2-way valve DN10 | PN700 | 40l/min, solenoid actuation

Designation	Basic position	Voltage	Article number
3/2-way valve DN10 PN700	A→T NO	24 VDC	6254543
	A→T NO	110 VAC	6547346
	A→T NO	230 VAC	6547354
3/2-way valve DN10 PN700	P→A NO	24 VDC	6254551
	P→A NO	110 VAC	6547362
	P→A NO	230 VAC	6547370

2/2-way valve DN10 | PN700 | 40l/min, solenoid actuation

Dimensions

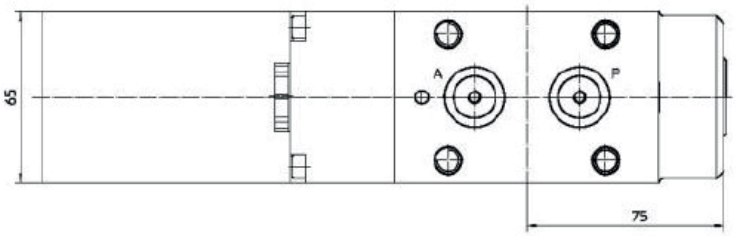

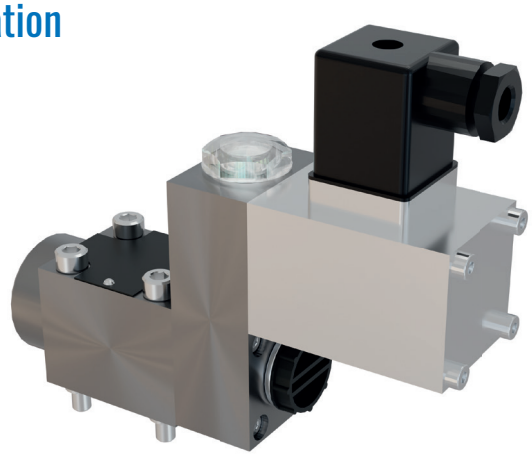

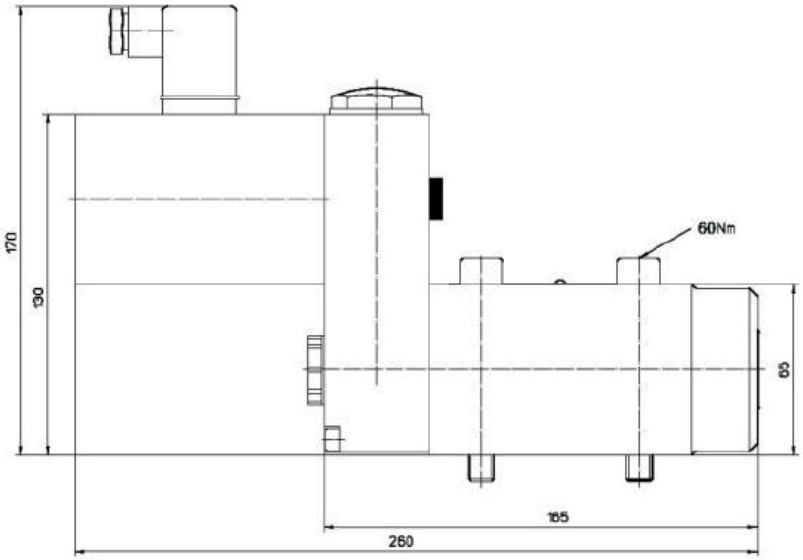

Symbol

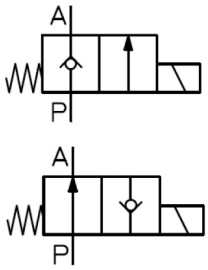

Connection diagram

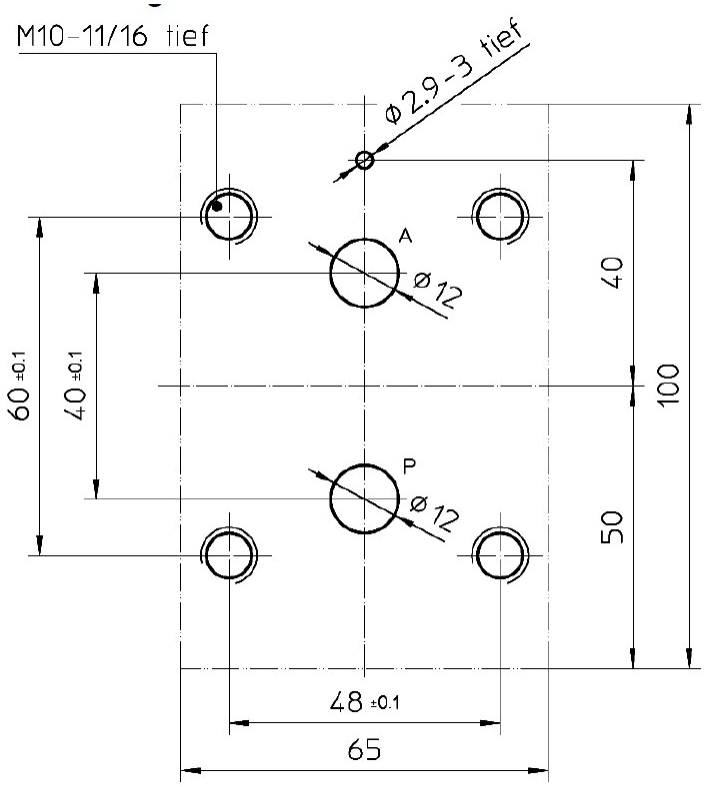

Δp – qV characteristic curve

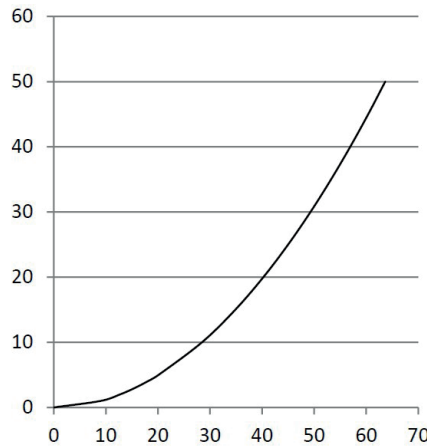

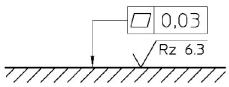

Required surface quality of the counterpart

3/2-way valve DN10 | PN700 | 40l/min, solenoid actuation

Dimensions

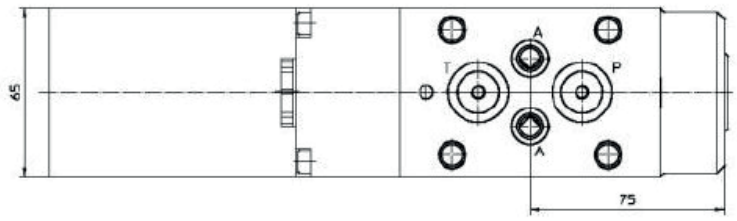

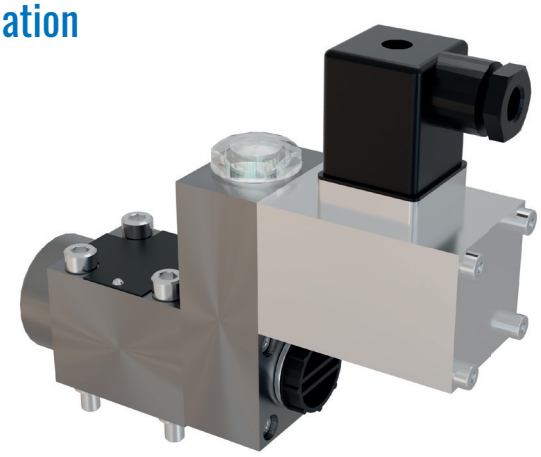

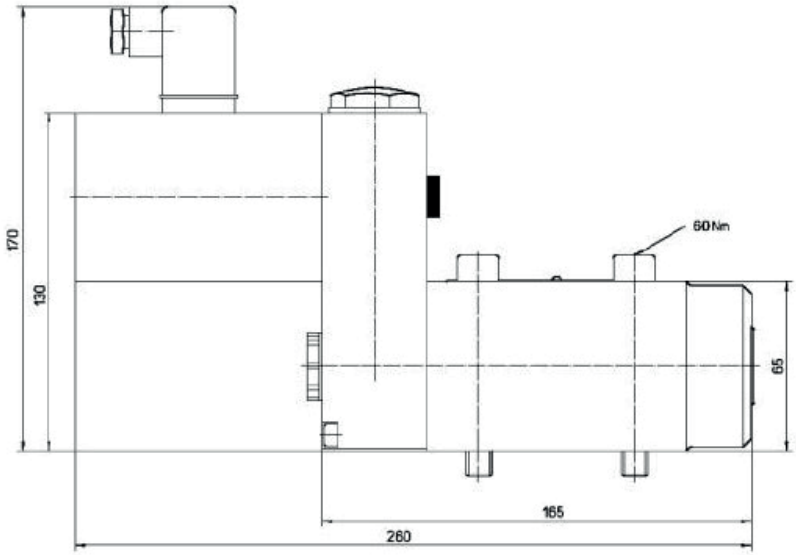

Symbol

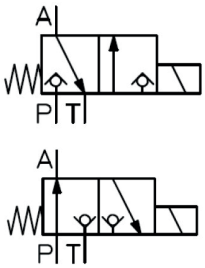

Connection diagram

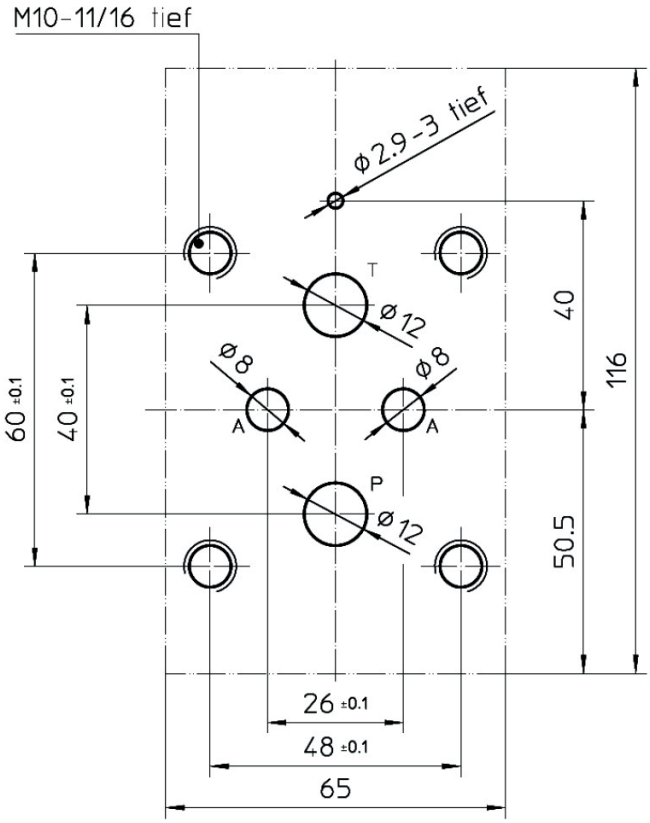

Δp – qV characteristic curve

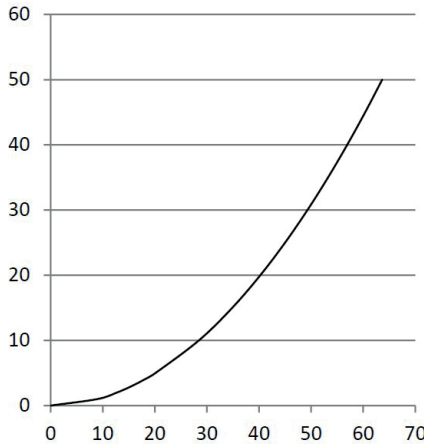

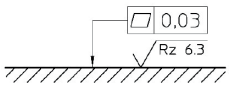

Required surface quality of the counterpart

Hauhinco Maschinenfabrik GmbH & Co. KG | Beisenbruchstraße 10 | 45549 Sprockhövel | Germany
Tel.: +49 2324/705-0 | Fax: +49 2324/705-222 | sales@hauhinco.de | www.hauhinco.com